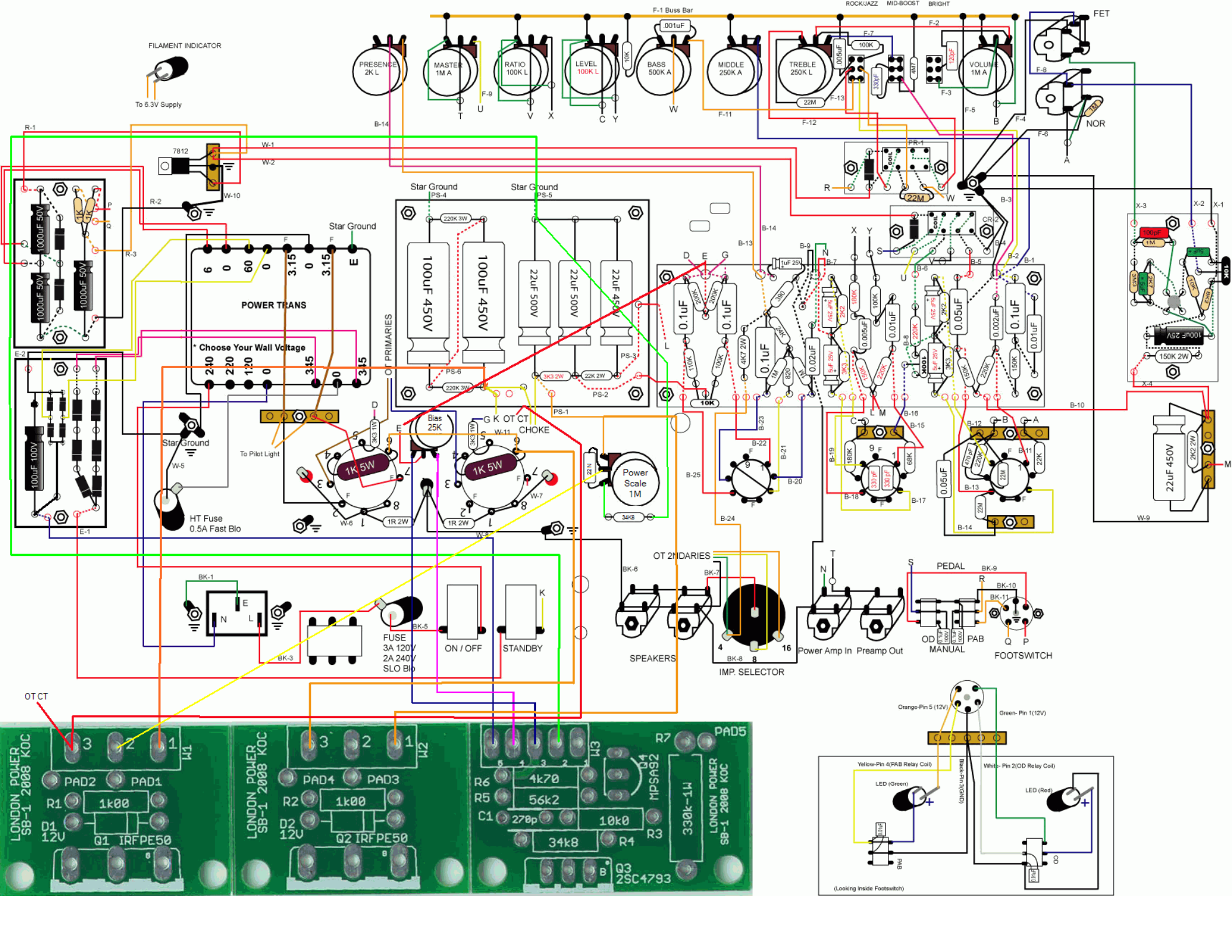

FILAMENT INDICATOR
To 6.3V Supply
F-1 Buss Bar
ROCK/JAZZ
MID-BOOST
BRIGHT
FET
NOR
PRESENCE 2K L
MASTER 1M A
RATIO 100K L
LEVEL 100K L
BASS 500K A
MIDDLE 250K A
TREBLE 250K L
VOLUME 1M A
7812
Star Ground
POWER TRANS
* Choose Your Wall Voltage
OT PRIMARIES
100uF 450V
22uF 500V
22uF 450V
1000uF 50V
100uF 100V
To Pilot Light
HT Fuse
0.5A Fast Blo
Bias 25K
1K 5W
CHOKE
Power Scale 1M
OT 2NDARIES
SPEAKERS
IMP. SELECTOR
Power Amp In
Preamp Out
PEDAL
MANUAL
FOOTSWITCH
FUSE
3A 120V
2A 240V
SLO Blo
ON / OFF
STANDBY
OT CT
LONDON POWER SB-1 2008 KOC
PAD1
PAD2
PAD3
PAD4
PAD5
1k00
Q1 IRFPE50
Q2 IRFPE50
Q3 2SC4793
Q4 MPSA92
330k-1W
Orange-Pin 5 (12V)
Green- Pin 1(12V)
Yellow-Pin 4(PAB Relay Coil)
White- Pin 2(OD Relay Coil)
Black-Pin 3(GND)
LED (Green)
LED (Red)
(Looking Inside Footswitch)